Journal of Photochemistry, *19* (1982) 321 - 327

OXYGEN DETECTION IN PHOTOCHEMICAL EXPERIMENTS

BARBARA SULZBERGER and GION CALZAFERRI

Institute for Inorganic and Physical Chemistry, University of Bern, Freiestrasse 3, CH-3000 Bern 9 (Switzerland)

(Received April 5, 1982)

Summary

We report an accurate but simple method for oxygen detection in photochemical experiments based on the Clark sensor. The sensitivity is higher than 0.01 Torr oxygen partial pressure. We discuss problems which arise in the calibration of flow systems and show how these problems can be solved. Measurements of the pH dependence of photoinduced oxygen evolution in a silver zeolite A are reported as an interesting application.

1. Introduction

Clark sensors, which can be obtained from several manufacturers, are widely used for oxygen detection in aqueous solutions [1]. They are usually equipped with a Teflon membrane and are of similar shape to the hydrogen sensor described in ref. 2. They can be used for accurate oxygen detection in solution as well as in the gaseous phase provided that the electrode is either kept at constant temperature or equipped with an automatic temperature-compensation device. Mills *et al.* [3] have recently described an interesting combined system for oxygen and hydrogen detection in photochemical experiments.

For several years we have been interested in the photochemical behaviour of metal-cation-exchanged zeolites [4 - 6]. In order to obtain quantitative information about the photochemical characteristics of these systems we have developed a very sensitive but simple method for the accurate detection of photochemical oxygen generation. We describe the method in detail because it has proved to be highly useful for this type of research. Although there is some controversy about the detection of oxygen with the aid of a Clark sensor [7], our experience has shown that the errors are not due to the principle of the sensor but to an inadequate experimental arrangement.

2. Method, calibration and results

Since Clark sensors have been described in detail in the literature [1], the discussion can be restricted to the points we have found to be important

0047-2670/82/0000-0000/$02.75 © Elsevier Sequoia/Printed in Switzerland

for photochemical applications. In these experiments it is often necessary to remove the photochemically generated oxygen in order to prevent back reaction. This can be done using a flow system (Fig. 1). Another advantage of a flow system with respect to a stationary system is the higher sensitivity of oxygen detection because residual current drifts become less important. For the detection of small amounts of oxygen or for very accurate measurements the electrode has to be held at constant temperature. Temperature fluctuations should be less than 0.1 °C and hence the oxygen sensor is kept in a thermostatted glass container. Instrumentation capable of measuring currents of at least 10 pA should be used in order to profit from the high sensitivity of the sensor. We have used a potentiostat combined with an electrometer (Metrohm 641 VA detector) which has a maximum sensitivity of 0.1 nA for 1 V output.

Figure 1 shows the experimental arrangement. The photoreactor which is kept at constant temperature is illuminated homogeneously from below. The light flux is measured with a photometer. The nitrogen flow is controlled by means of a double-needle valve. The oxygen sensor is a thermostatted Clark electrode with shielded connections to the electrometer.

One of the most important points in such an arrangement is the calibration of the sensor. Oxygen detection in a flow system depends on a time factor regardless of whether a Clark sensor or a gas chromatographic method is chosen. This is also the case if the signal and the oxygen partial pressure are directly proportional. The time factor is due to a non-equilibrium situation for fast oxygen injection or production. This problem can be understood in a more quantitative way by the following reasoning. From experience we know that for an experimental arrangement such as that shown in Fig. 1 the transfer function $h(t)$ of a perturbation $f(t)$ caused by oxygen injection or production can be described in the simplest case as the sum of a fast and a slow exponential decay:

$$h(t) = a_1 \exp\left(-\frac{t}{\tau_1}\right) + a_2 \exp\left(-\frac{t}{\tau_2}\right) \tag{1}$$

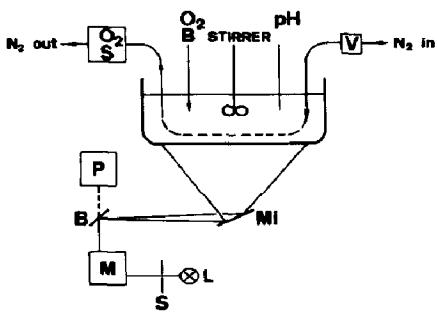

Fig. 1. Detection of photochemically produced oxygen in a flow system: L, light source (200 W high pressure mercury lamp); S, shutter; M, monochromator or interference filter; B, beam splitter; P, photometer; Mi, mirror; V, valve; O_2 B, oxygen burette for calibration; pH, pH electrode; O_2 S, oxygen sensor in a thermostatted housing.

The response $g(t)$ of the system is equal to the convolution integral:

$$g(t) = \int_{-\infty}^{\infty} h(t-\nu)f(\nu)\,\mathrm{d}\nu \tag{2}$$

The behaviour of this integral is shown in Fig. 2. Two rectangular injections of the same total amount of oxygen in different time intervals $\Delta t_a = 40$ and $\Delta t_b = 80$ are compared by assuming $\tau_1 = 10$, $\tau_2 = 100$ and $a_1/a_2 = 10$ (the units of time and partial pressure are arbitrary; only the relative values are important). The integrals of the two response functions $g_a(t)$ and $g_b(t)$ are the same provided that the signal-to-noise ratio is infinitely large. However, in the case of a signal-to-noise ratio of, for example, 20:1 relative to the maximum of the first peak, part of the area $\int_0^{\infty} g(t)\,\mathrm{d}t$ lies within a region where the signal is masked by the noise. In case a this region is 4.7% of the area and in case b it is 4.6% of the area. This portion of the signal cannot be integrated.

Very often it is not practical to wait for several hours for the signal decay to complete. Thus we need to know whether it is possible to calibrate the detector in such a way that integration can be stopped shortly after the oxygen production or injection is complete, regardless of the time interval during which the perturbation has been applied. Model calculations based on the transfer function (eqn. (1)) suggest that this should be possible. The error induced by truncating the integration can be kept significantly smaller than the errors due to the signal-to-noise ratio. However, it is clear that this result has to be checked experimentally. Therefore it is important to have an appropriate calibration method.

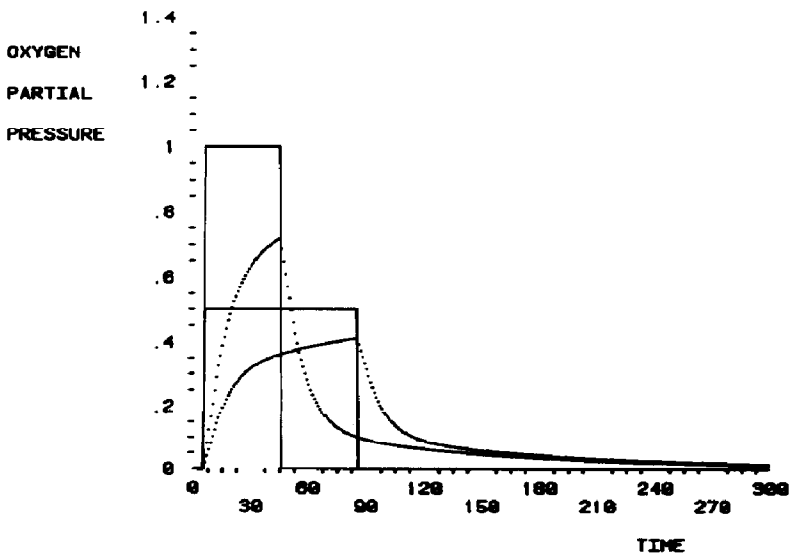

Fig. 2. Model calculation of the response function after a rectangular perturbation. The transfer function is a sum of a fast and a slow exponential decay (eqn. (1)).

The calibration problem for a flow system such as that described in this paper can be solved very well by using a burette for accurate oxygen dosage, *e.g.* the programmable microprocessor-controlled Microlab P burette (Hamilton). This burette can be used to introduce small oxygen samples of accurately known volume into the reactor in well-defined time intervals, *e.g.* 100 μl in 4 s, 300 s, 1000 s etc. up to about 2 h, depending on the external control of the microprocessor. Figure 3 shows measurements obtained when 100 μl of air corresponding to 20.9 μl of oxygen was injected into the photoreactor in time intervals of 4 s, 293 s, 707 s, 1390 s and 3526 s. The nitrogen flow through the reactor which had a total volume of about 150 ml was kept constant at 30 ml min^{-1} by means of a double-needle valve.

The results of such experiments are reported in Table 1. In all cases we stopped the integration 50 min after the oxygen injection was complete. The standard deviation of the integrals of five measurements where 100 μl of air were injected in identical time intervals is 1.5%. Within the limits of experimental error no time dependence was observed when the injection time was changed. From this result we conclude that there is no significant time dependence in our arrangement. The calibration of the sensor is therefore valid, regardless of the time interval during which the oxygen is produced.

A calibration curve for very small oxygen partial pressures is shown in Fig. 4. It was obtained by injecting 14.2 - 95.1 μl of air in 5 min. In order to check the precision three of the data points shown were obtained in independent experiments.

To demonstrate the utility of this type of measurement we briefly describe a photochemical experiment on silver zeolites [4]. Sodium zeolite A [8] was exchanged to 97% by Ag^+ and evacuated at room tempera-

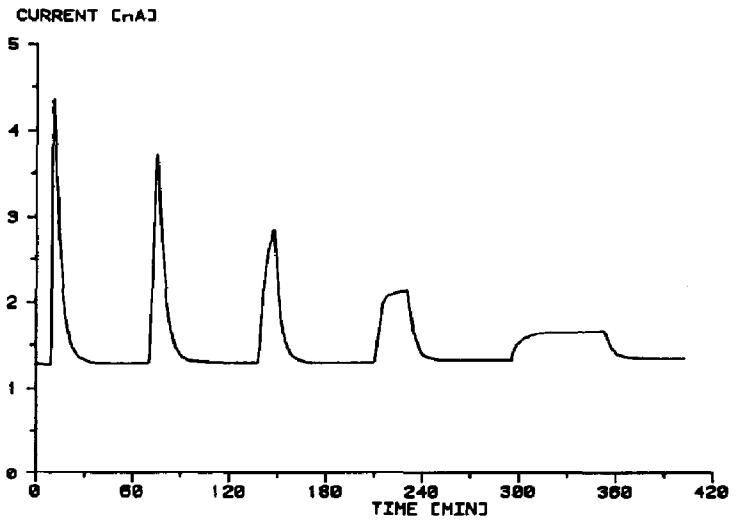

Fig. 3. Experimental response to oxygen injections within different time intervals.

TABLE 1

Integral of experimental response to oxygen injections in different time intervals

Injection time (s)	*Peak integral*
4	65.5
293	65.7
707	59.4
1112	59.2
1390	63.6
2438	67.8
2938	66.6
3526	66.5
4346	64.3
5485	64.8
Mean	64.3 ± 2.9
293	65.0
293	66.6
293	65.7
293	66.5
293	64.4
Mean	65.6 ± 1.0

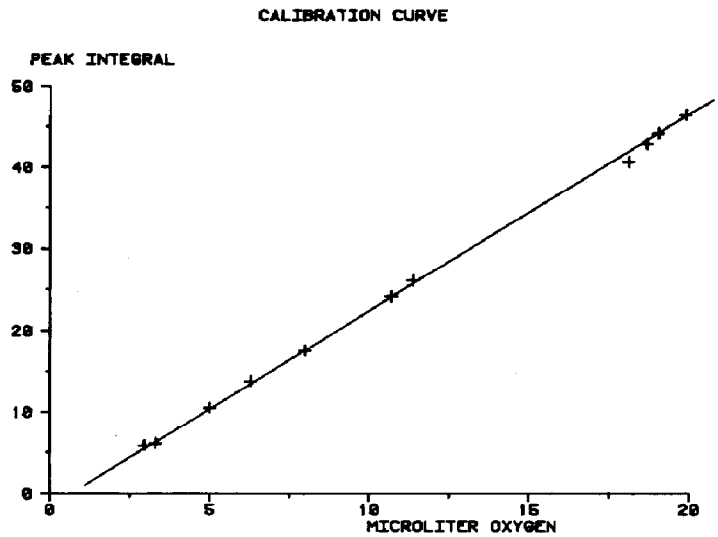

Fig. 4. Calibration curve of the Clark sensor in the flow system in Fig. 1.

ture and about 10^{-3} Torr overnight. 0.2 g of the zeolite were introduced into the photoreactor, avoiding any contact with air. The photoreactor contained 100 ml of oxygen-free water. Different pH values were established by adding 0.1 M H_2SO_4 or 0.1 M NaOH by means of a microburette. The

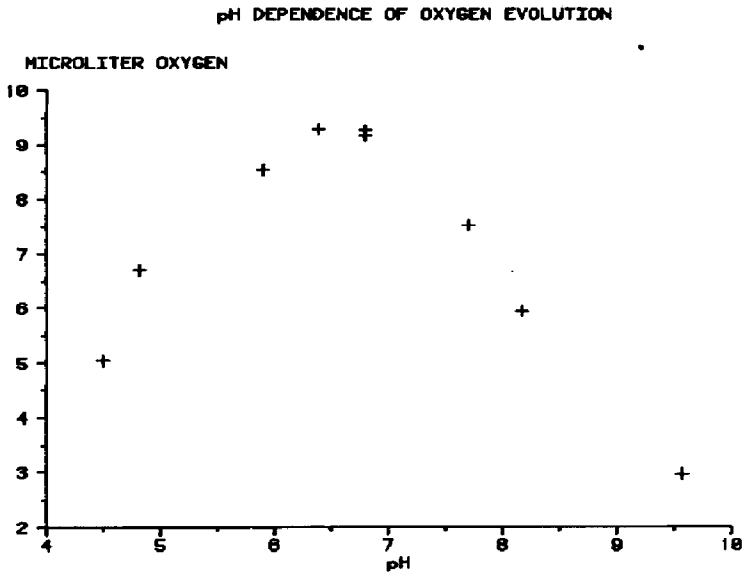

Fig. 5. pH dependence of photoinduced oxygen evolution in a water suspension of a silver zeolite A.

suspension was irradiated from below for 5 min for each point through a broad-band interference filter with a transmission maximum at 360 nm (Fig. 1). The light flux was measured to be about 100 μW cm^{-2} and the irradiated surface area was 35 cm^2. The light was completely absorbed by the zeolite suspension. As shown in Fig. 5 we observed a very interesting pH dependence on the photoinduced oxygen evolution. The experiment was started at pH 9.6. By titrating with 0.1 M H_2SO_4 measurements were continued point by point from this pH down to pH 4.5. We checked that oxygen evolution at pH 6.8 did not diminish during the whole experiment. Different pH dependences of photo-oxygen evolution were observed for different types of zeolite. By using a monochromator instead of an interference filter we were able to observe self-sensitization of oxygen production in a silver zeolite A [4]. This experiment was only possible because of the high sensitivity of oxygen detection. It is obvious that in experiments in which other oxidizing gases, *e.g.* chlorine or bromine, are produced [4, 6] they have to be separated from the oxygen. In most cases this can easily be done.

Acknowledgments

We should like to thank Mr. Jürg Baumann for providing us with his computer graphic package. This paper is part of Project 4.340.79.04 financed by the Swiss National Science Foundation.

References

1 H. Dietz, W. Haecker and H. Jahnke, *Adv. Electrochem. Electrochem. Eng.*, *10* (1974) 1.
A. F. Bogenschütz and W. Krusemark, *Elektrochemische Bauelemente*, Verlag Chemie, Weinheim, 1976.
2 H. R. Grüniger, B. Sulzberger and G. Calzaferri, *Helv. Chim. Acta*, *61* (1978) 2375.
3 A. Mills, A. Harriman and G. Porter, *Anal. Chem.*, *53* (1981) 1254.
4 B. Sulzberger, *Ph.D. Thesis*, Institute for Inorganic Chemistry, University of Bern, to be published.
5 S. Leutwyler and E. Schumacher, *Chimia*, *31* (1977) 475.
E. Schumacher, *Chimia*, *32* (1978) 193.
6 G. Calzaferri, *Chimia*, *35* (1981) 209.
7 M. Grätzel, K. Kalyanasundram and J. Kiwi, *Struct. Bonding (Berlin)*, *49* (1982) 50.
8 D. W. Breck, *Zeolite Molecular Sieves*, Wiley, New York, 1974.